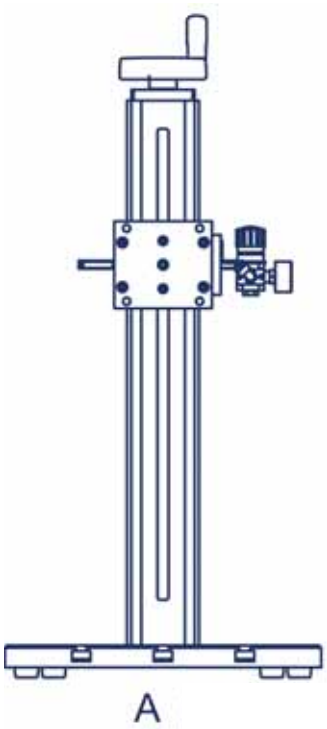

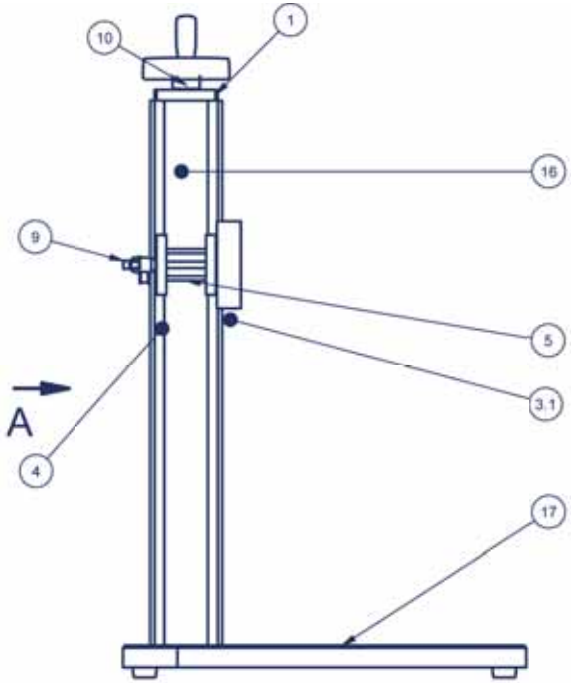

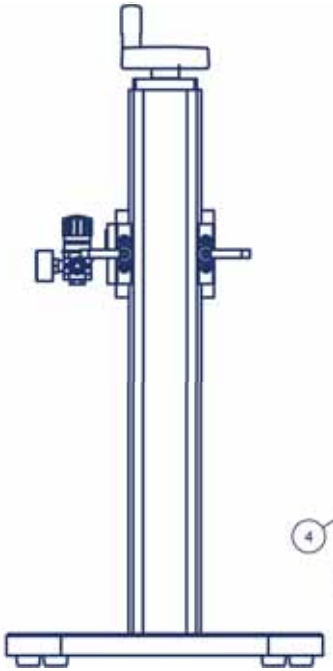

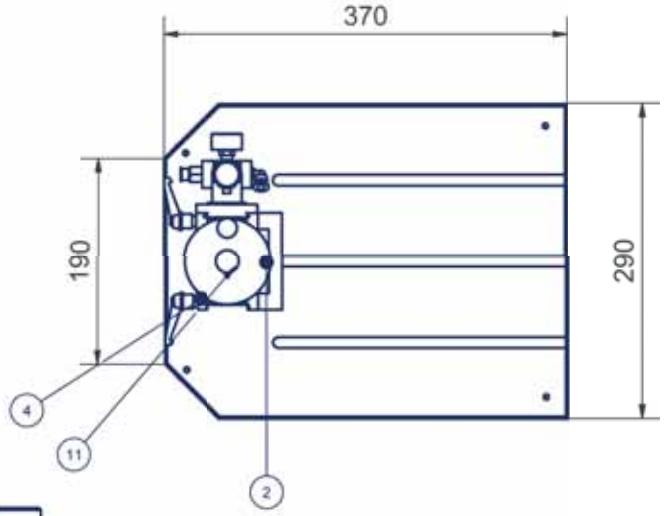

A division of Trend Agencies International Pty Ltd.
ACN 081 018 911 ABN 33081 018 911

PO Box 1311 Castle Hill NSW 2154 Australia
TEL: (02) 9629-9535 FAX: (02) 9629-7535

INTERNET: www.trendmarking.com.au
EMAIL: trend@trendmarking.com.au

Trend Marking Systems

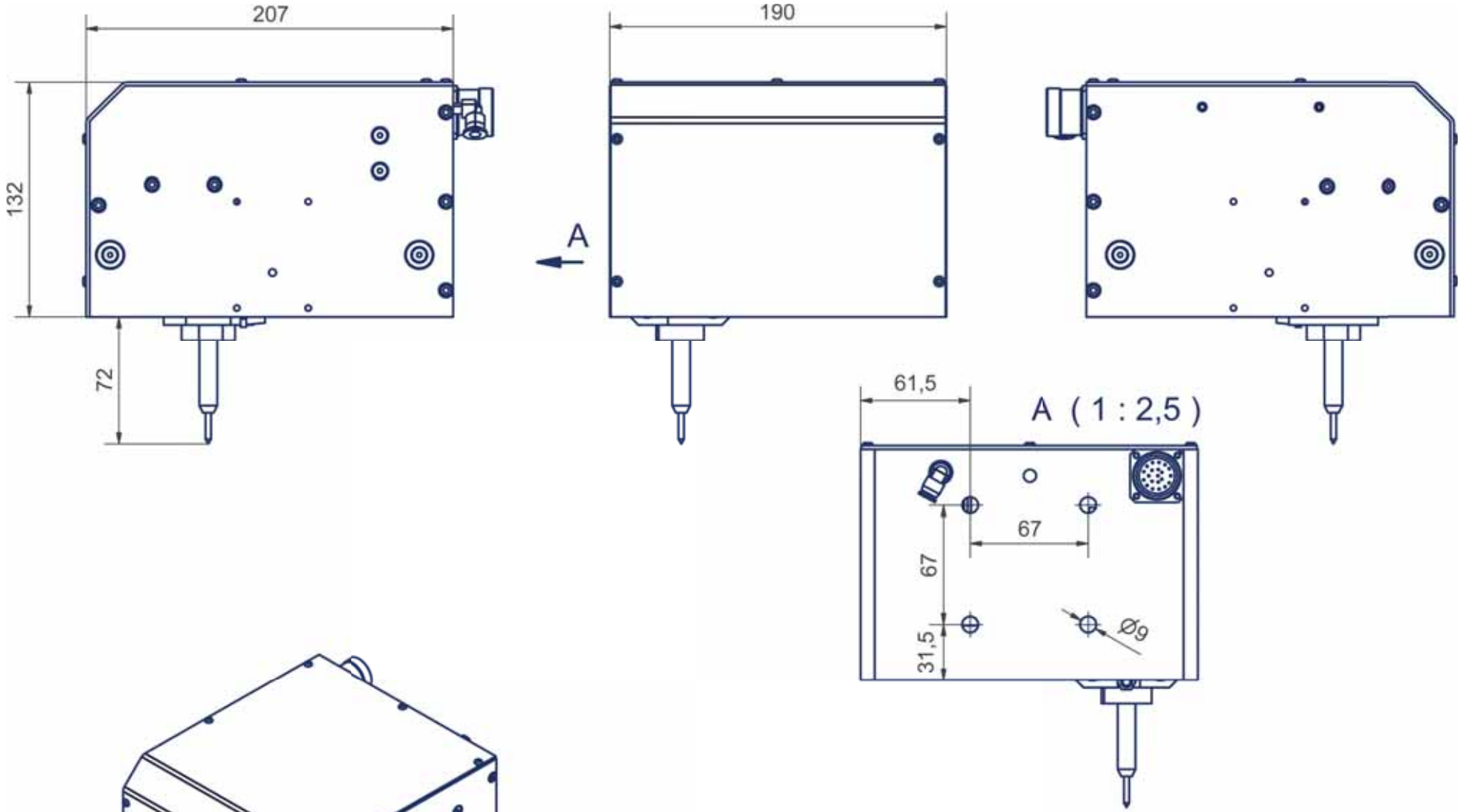

A division of Trend Agencies International Pty Ltd.
ACN 081 018 911 ABN 33081 018 911

PO Box 1311 Castle Hill NSW 2154 Australia
TEL: (02) 9629-9535 FAX: (02) 9629-7535

INTERNET: www.trendmarking.com.au
EMAIL: trend@trendmarking.com.au

Trend Marking Systems